Class 8: Seven-Segment Display and Temperature Sensor

Remember

- The reference for hardware is their data sheets! Sparkfun has all the datasheets.
- https://www.sparkfun.com/products/10988
- https://www.sparkfun.com/products/10931

Information

- What is a sensor? How might a sensor work?
- What is seven-segment display?

Temperature Sensor (TMP36)

- Simple configuration:

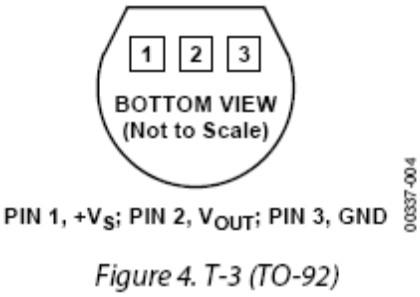

Figure 4. T-3 (TO-92)

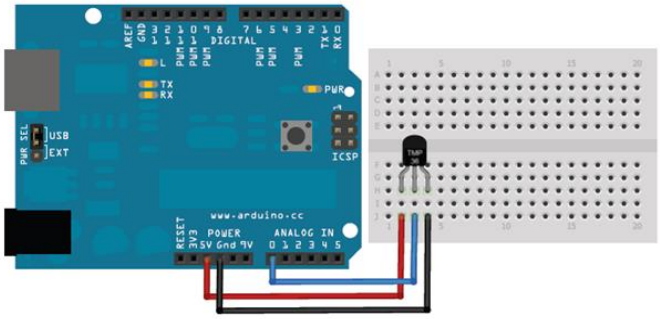

- Voltage at pin in milliVolts = (reading from ADC) * (+Vs/1024)
- Centigrade temperature = [(analog voltage in mV) - 500] / 10
- C = 5/9 *(F-32)

More: http://learn.adafruit.com/tmp36-temperature-sensor/using-a-temp-sensor

```
//TMP36 Pin Variables
int sensorPin = 0; //the analog pin the TMP36's Vout (sense) pin is connected
to
                        //the resolution is 10 mV / degree centigrade with a
                        //500 mV offset to allow for negative temperatures

/*
 * setup() - this function runs once when you turn your Arduino on
 * We initialize the serial connection with the computer
 */

void setup()
{
  Serial.begin(9600);  //Start the serial connection with the computer
                       //to view the result open the serial monitor
}

void loop()                     // run over and over again
{
```

```
 //getting the voltage reading from the temperature sensor
 int reading = analogRead(sensorPin);

  // converting that reading to voltage, for 3.3v arduino use 3.3
 float voltage = reading * 5.0;

 voltage /= 1024.0;

 // print out the voltage
 Serial.print(voltage); Serial.println(" volts");



 // now print out the temperature
 float temperatureC = (voltage - 0.5) * 100 ;  //converting from 10 mv per
degree with 500 mV offset
                                               //to degrees ((volatge - 500mV)
times 100)

 Serial.print(temperatureC); Serial.println(" degrees C");

 // now convert to Fahrenheight
 float temperatureF = (temperatureC * 9.0 / 5.0) + 32.0;

 Serial.print(temperatureF); Serial.println(" degrees F");

 delay(1000);                                     //waiting a second

}
```

Seven-Segment Display

- Each digit requires 7 inputs to be displayed correctly. For all the digits we need 28pins. What can we do?
- With shift registers: https://www.sparkfun.com/products/733 or more intelligent approaches.
- Let's do it together!

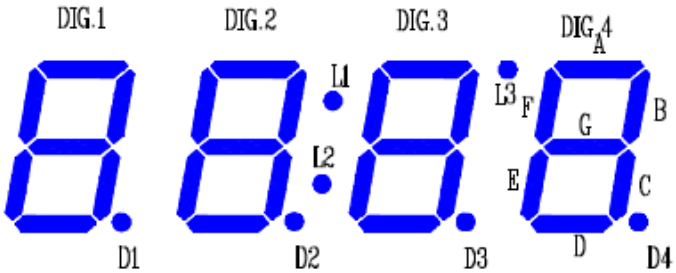

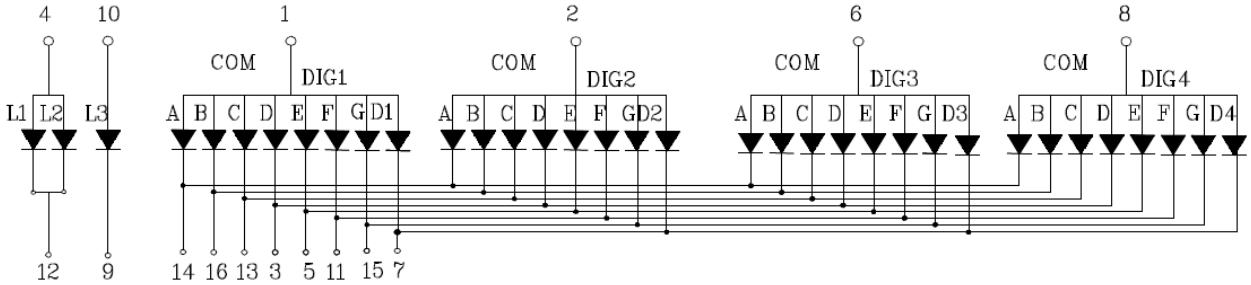

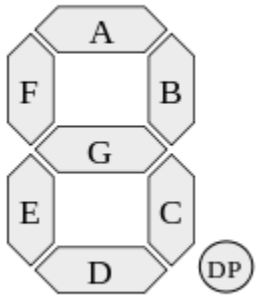

Steps

- Look at the data sheet for pins, required voltage, maximum current
- V = I* R
- Connect accordingly! You will need lots of jumpers

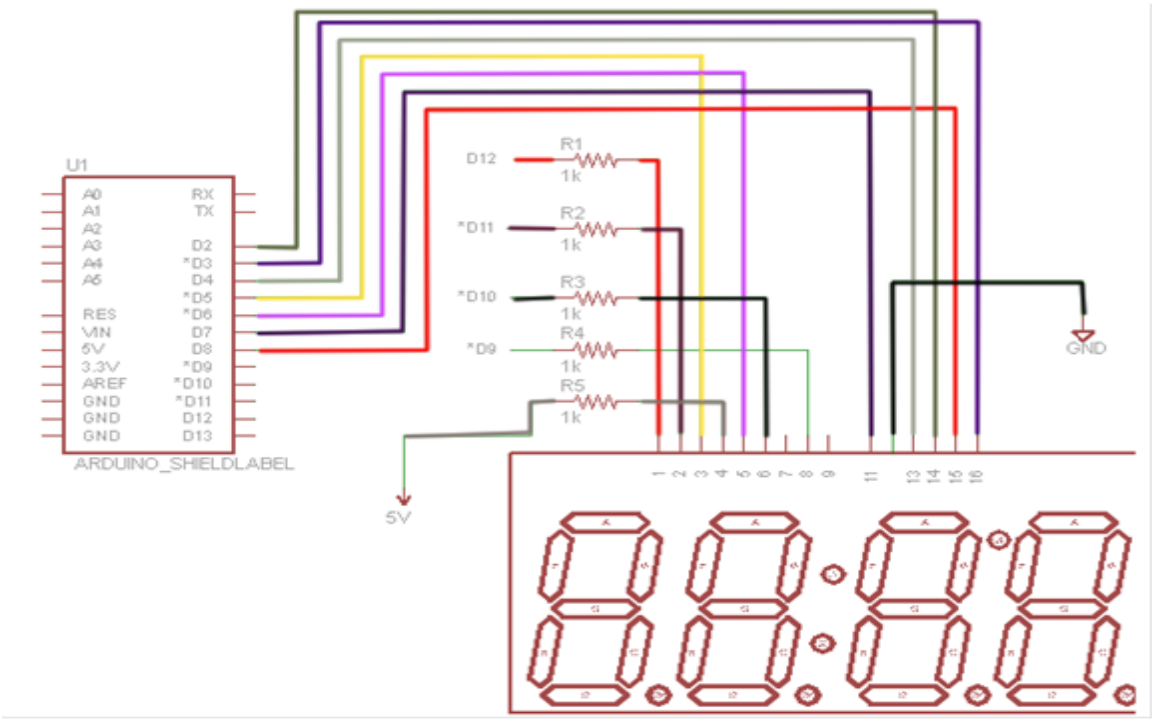

- **Example Code:** Displays 12:34

```
//These pins powers each digit
int d1=12,d2=11,d3=10,d4=9;


// Use ports for simpler configuration of the 7 outputs
// http://www.arduino.cc/en/Reference/PortManipulation
```

```
void setup()
{
DDRD=0xff; // all pins 0-7 OUTPUTs
DDRB=0xff; // all pins 8-13 OUTPUTs even though we only use pins 8-12
PORTD=0x00; // make pins 0-7 LOWs
PORTB=0x00; // make pins 8-13 LOWs
}

void loop()
{
// light up first digit only
digitalWrite(d2,LOW);
digitalWrite(d3,LOW);
digitalWrite(d4,LOW);
digitalWrite(d1,HIGH);

// light up segments of first digit, display number #1, segments bc
PORTD=B11100111; //B00011000; // only pins 2 and 3 are on
digitalWrite(8,HIGH); // turn off pin 8
delay(2);

// light up second digit only
digitalWrite(d1,LOW);
digitalWrite(d3,LOW);
digitalWrite(d4,LOW);
digitalWrite(d2,HIGH);



// light up segments of second digit, display #2, segments abdeg
PORTD=B10010011; //B01101100; // only pins 2,3,5 and 6 on
digitalWrite(8,LOW); // segment g on
delay(2);

// light up third digit only
digitalWrite(d1,LOW);
digitalWrite(d2,LOW);
digitalWrite(d4,LOW);
digitalWrite(d3,HIGH);

// light up segments of third digit, display #3
PORTD=B11000011; //B00111100; // only pins 2,3 and 5 on
digitalWrite(8,LOW); // segment g on
delay(2);

// light up fourth digit only
digitalWrite(d1,LOW);
digitalWrite(d2,LOW);
digitalWrite(d3,LOW);
digitalWrite(d4,HIGH);

// light up segments of fourth digit only, display #4
PORTD=B01100111; //B10011000; // only pins 3,4 and 7 on
digitalWrite(8,LOW); // segment g on
delay(2);
}
```

- Future: Search around the web for digital clocks using 7-segment displays and Arduino.

Assignments (DUE Aug 2)

- Catch up/fix any code that is not working. Combine Temperature sensor with 7-Segment Display
    - Tip: Create functions/binary codes for each number!

    - Tip: LEDs and the sensor may not need the same update/refresh rate
- Add what you learned in the classes to your own projects.
- Next time seven segment displays and temperature sensor if any left and accelerometer.