Class 9: Motor Driver

Motor driver allows us to control speed and direction of a DC motor

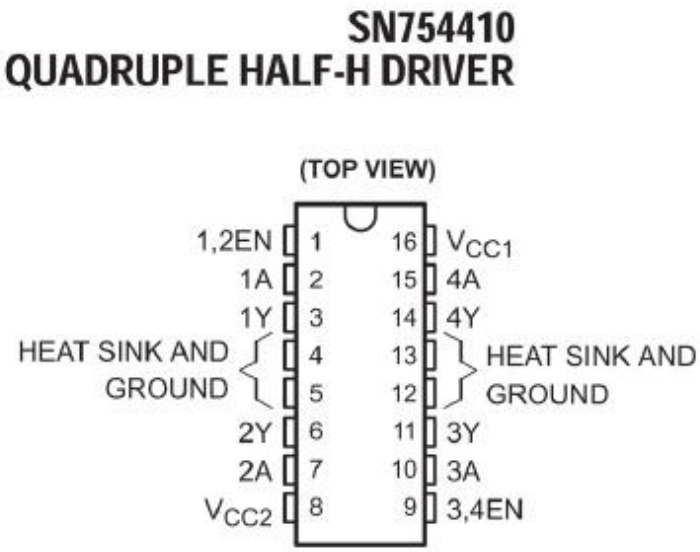

FUNCTION TABLE
(each driver)

INPUTS†		OUTPUT
A	EN	Y
H	H	H
L	H	L
X	L	Z

H = high-level, L = low-level
X = irrelevant
Z = high-impedance (off)
† In the thermal shutdown mode, the output is in a high-impedance state regardless of the input levels.

- SN754410 can drive two motors.
- Depending on the current consumption, Arduino 5V out may not be enough (provide external source).
- If necessary, use the heat sink.

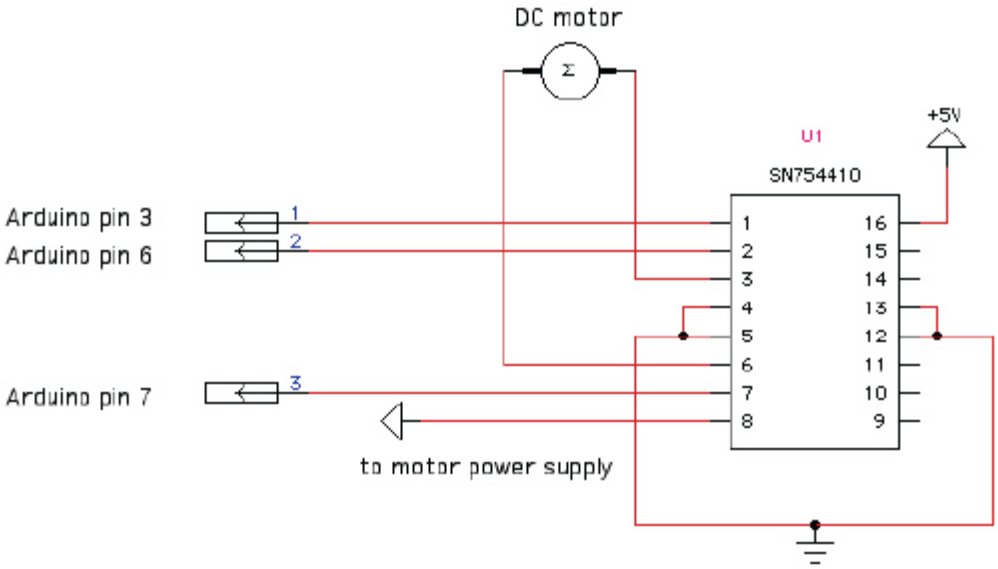

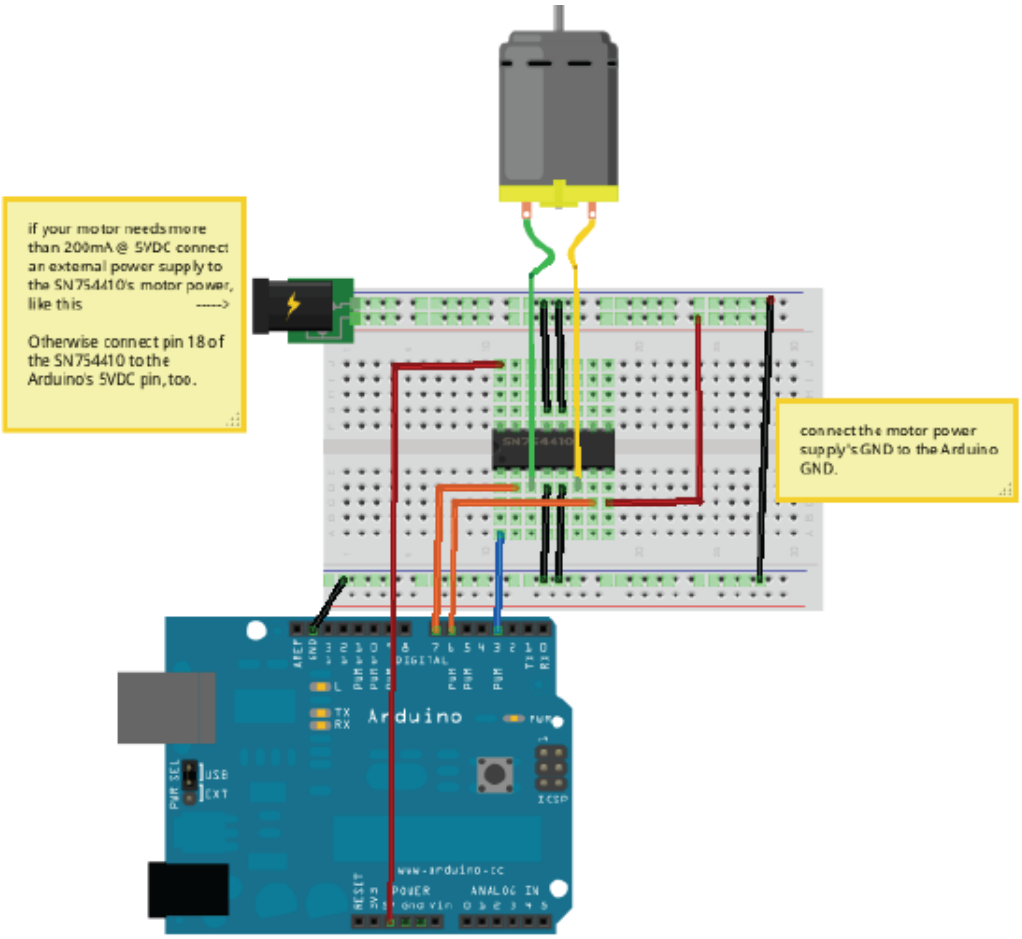

- Use SN754410 with ControlP5 to have a nice user interface

```
import processing.serial.*;
import cc.arduino.*;
import controlP5.*;

ControlP5 controlP5;
Arduino arduino;

int DC_speed = 150; // 0-255
int direction = 1;  // 0: backward, 1: forward

void setup() {
  size(400,400);
  println(Arduino.list());
  arduino = new Arduino(this, Arduino.list()[0], 57600);
```

```
  for (int i = 0; i <= 13; i++)
    arduino.pinMode(i, Arduino.OUTPUT);
    // pin3: PWM, pin 6: 1A, pin 7: 2A (see SN754410 datasheet)



  controlP5 = new ControlP5(this);
  controlP5.addSlider("DC_speed",0,255,DC_speed,20,10,255,20);

  Radio r = controlP5.addRadio("radio",20,50);
  //r.deactivateAll();
  // use deactiveAll to NOT make the first radio button active.

  r.add("forward",0);
  r.add("backward",1);
}

void draw() {
  arduino.analogWrite(3, DC_speed);

  if (direction == 1) { // run in one direction, i.e. forward
    arduino.digitalWrite(6, 1);
    arduino.digitalWrite(7, 0);
  }

  else { // run in the opposite direction, i.e. backward
    arduino.digitalWrite(6, 0);
    arduino.digitalWrite(7, 1);
  }
}

void radio(int theID) {
  switch(theID) {

    case(0):
      direction = 1;  // forward
      break;

    case(1):
      direction = 0;  // backward
      break;
  }

}
```